Insert to Duct

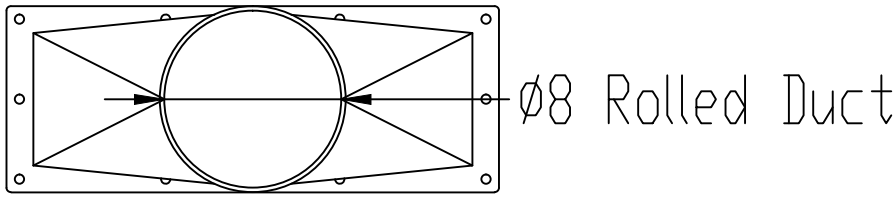

Top View

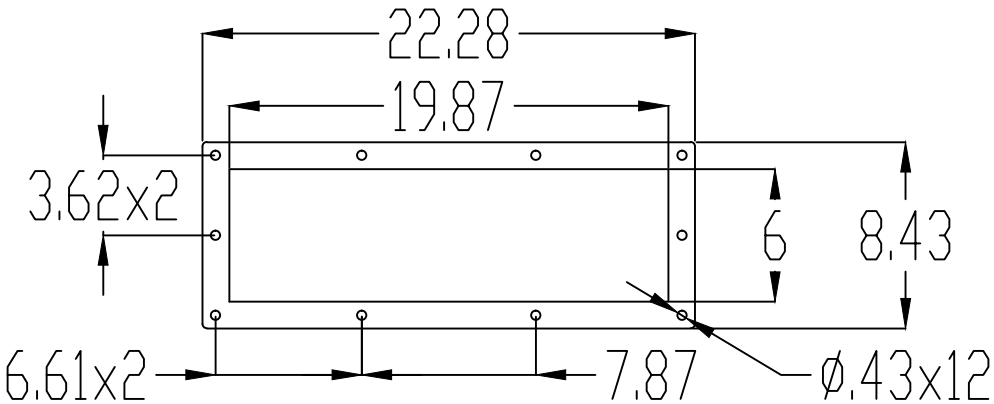

Bottom View

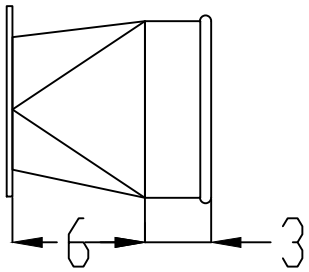

Side View

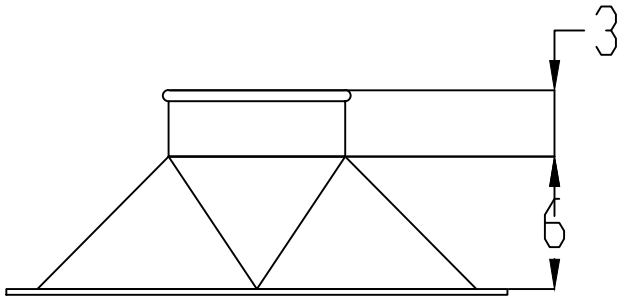

Front View